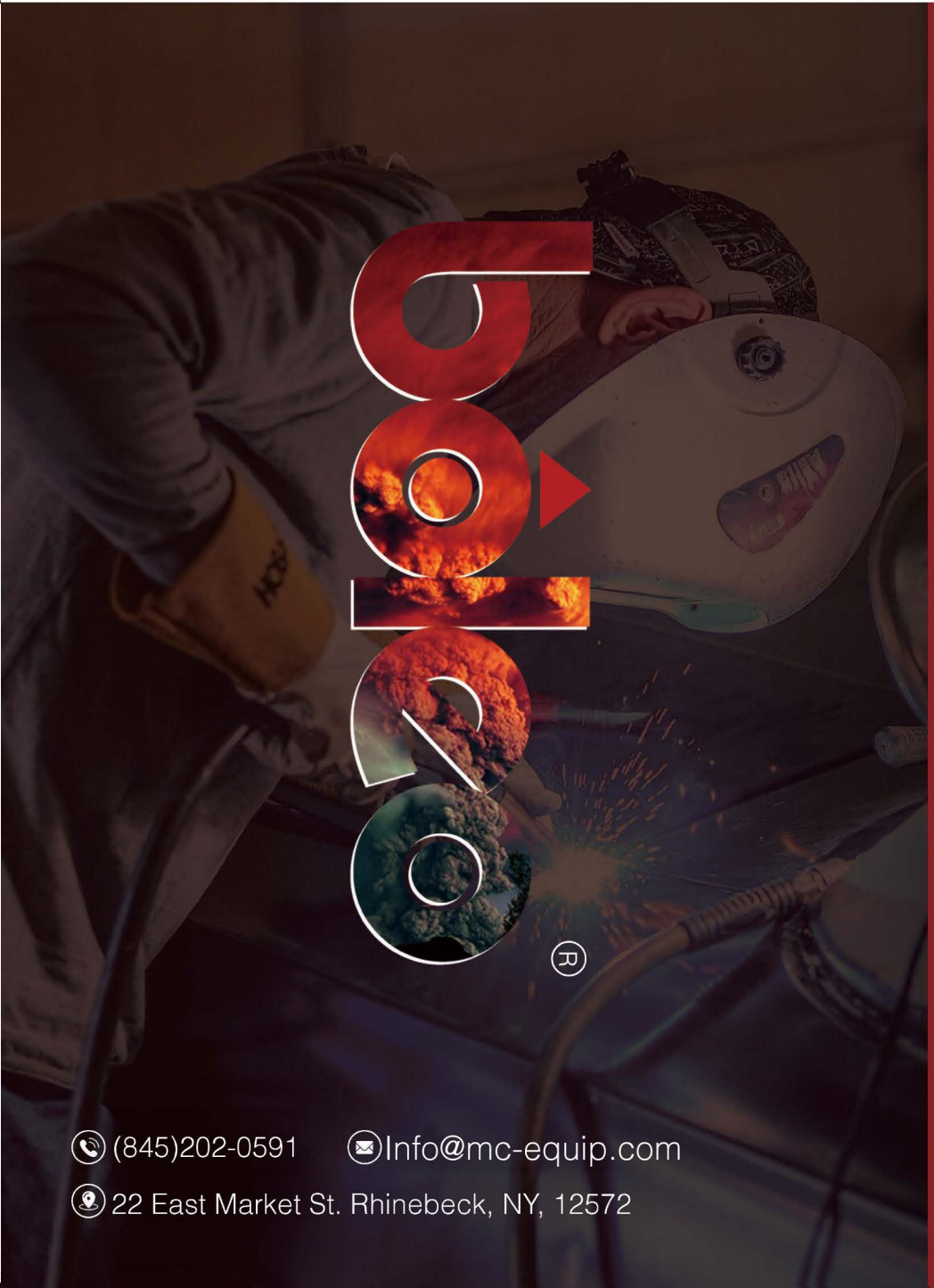

bôlco®

(845)202-0591 Info@mc-equip.com

22 East Market St. Rhinebeck, NY, 12572

Malcarne Equipment

bôlco®

TOUGH AND MORE!

SKID STEER ATTACHMENTS

TOUGH AND MORE

CONTENTS

Grass Cutter 02
Pallet Fork 02
Vibratory Roller 02
4-in-1 Bucket 03
Angel Broom 03
Pick up Sweeper 04
Breaker Hammer 04
Cold Planner 05
Trencher 05
Snow Blade 05
Snow Blower 06
Concrete Mixer Bucket 06
Disc Ditcher 07
Dozer Blade 07
Bag Grapple 07
Tree Spade 08
Tree Spade 08
Grass Grapple 08
Backhoe Digger 09
Tree Shear 09
Auger 10
Forestry Mulcher 10
Tree Saw 11
Wood Chipper 11
Tree Spade 11

Grass Cutter

SST-GC08

MODEL	SST-GC08A	SST-GC08B
Overall length (mm)	1940	2345
Overall width (mm)	1830	2035
Overall height (mm)	595	555
Weight (includingaccessory)(kg)	495	635
Operating width(mm)	1530	1830
Max. sustainable operating pressure(MPa)	21	21
Cutting height (mm)	⩾50	⩾50
Blade quantity(pcs)	2	2
Working hydraulic flow(L/Min)	60-80	60-80
Compatible Carrier	Skid steer loader / Loader	

Pallet Fork

SST-PF02

MODEL	SST-PF02A	SST-PF02B
Overall Width (mm)	1590	1590
Overall Height (mm)	820	820
Length of forklift teeth (mm)	1070	1070
Height of forklift teeth (mm)	30	35
Width of forklift teeth (mm)	90	100
Range of adjustable distance (mm)	330-1290	330-1290
Weight (Kg)	175	190
Rated Load	1T	1.5T
Compatible Carrier	Skid steer loader / Compact Loader	

Vibrotary Roller

SST-VR05

MODEL	SST-VR05A	SST-VR05B
Overall length (mm)	1760	2060
Overall width(mm)	980	980
Overall height (mm)	666	666
Diameter of the roller (mm)	φ590	φ590
Weight (Kg)	890	955
Exciting force (KN) @ (L/Min)	31 @ 60	37 @ 60
Swing angle (°)	±15 °	±15 °
Hydraulic flow (L/Min)	60-70	60-70
Max. sustainable pressure (MPa)	20	20
Compatible Carrier	Skid steer loader / Loader	

4 in 1 Bucket

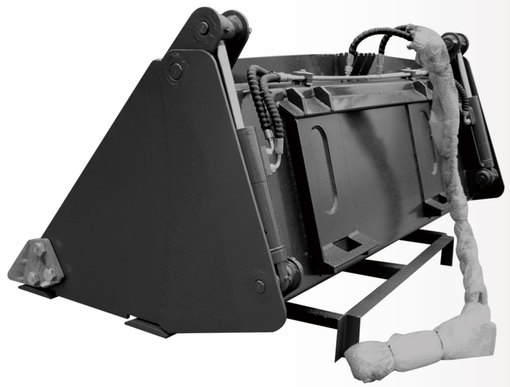

SST-41B

MODEL	SST-41BA	SST-41BB	SST-41BC	SST-41BD
Overall length (mm)	530	940	940	940
Overall width (mm)	1036	1579	1899	2195
Overall height (mm)	522	820	820	820
Mouth-opening distance (mm)	550	900	900	900
Weight (Kg)	117	430	489	537
Capacity (m^3)/ Stacking capacity (m^3)	0.09/0.13	0.42/0.52	0.50/0.62	0.57/0.76
Hydraulic flow (L/min)	10-15	20-30	20-30	20-30
Max. sustainable pressure (MPa)	21	21	21	21
Optional accessory	Bucket teeth			
Compatible Carrier	Mini skid steer loader	Skid steer loader		

Angle Broom

SST-AB01

MODEL	SST-AB01A	SST-AB01B	SST-AB01C
Overall length (mm)	1625	1625	1625
Overall width(mm)	1804	2163	2435
Overall height (mm)	870	870	870
Weight (kg)	500	545	575
Sweeping width (mm)	1500	1800	2100
Deflection angle (°)	±30 °	±30 °	±30 °
Sweeping width in the time of 30° deflection angle (mm)	1250	1550	1850
Diameter of roller brushes (mm)	Φ800	Φ800	Φ800
Max. working pressure (Mpa)	21	21	21
Required hydraulic flow (L/Min)	70-85	80-100	80-100
Working voltage (V)	DC12/24	DC12/24	DC12/24
Compatible Carrier	Skid steer loader / Loader		

Pick Up Sweeper

SST-RS02

MODEL	SST-RS02A	SST-RS02B	SST-RS02C
Overall length (mm)	1450	1450	1450
Overall width (mm)	1817	2117	2466
Overall height (mm)	926	926	926
Height (support spring is not included) (mm)	680	680	680
Weight (Kg)	456	480	540
Capacity of collection hopper (m^3)	0.39	0.46	0.56
Actual sweep width (mm)	1530	1830	2130
Diameter of brushes roller (mm)	φ660	φ660	φ660
Max. working pressure (Mpa)	21	21	21
Required hydraulic flow (L/min)	60-80	60-80	80-90
Suitable machine	Skid steer loader / Loader / Backhoe		
Compatible Carrier	Atomization dust elimination system		
	Cleaning system of side brushes		

Breaker Hammer

SST-BH03

MODEL	SST-BH03A	SST-BH03B	SST-BH03C	SST-BH03D
Overall length (mm)	1625	1200	1200	1200
Overall width(mm)	1804	502.9	530	439
Overall height (mm)	870	1580.7	1471	1018
Drill rod diameter (mm)	φ75	φ70	φ53	φ45
Hydraulic flow (L/min)	50-90	40-70	25-50	20-40
Working pressure (bar)	120-150	110-140	90-120	90-120
Impact frequency (bpm)	400-800	500-900	600-1200	700-1200
Air pressure of nitrogen chamber (Kg/cm²)	12-14	12-14	12-14	12-14
Weight (Kg)	566	428	285	183
Compatible Carrier	Skid steer loader / Loader/ Backhoe loader / Excavator			

Cold Planner

SST-CP06

MODEL	SST-CP06A	SST-CP06B	SST-CP06C
Overall length (mm)	1376	1376	1376
Overall width(mm)	1727	1727	1727
Overall height (mm)	935	935	935
Milling width (mm)	300	450	500
Max. milling depth (mm)	150	150	150
Max. side-shifting distance (mm)	600	600	600
Hydraulic flow (L/min)	120-130	130-140	130-140
Max. sustainable pressure (MPa)	21	21	21
Working voltage (V) (Optional)	DC12/24	DC12/24	DC12/24
Weight (Kg)	580	887	980
Compatible Carrier	Skid steer loader (with high hydraulic flow)		

Trencher

SST-TR07

MODEL	SST-TR07A	SST-TR07B	SST-TR07C
Overall length (mm)	1703	1990	2355
Overall width(mm)	767	767	767
Overall height (mm)	1330	1330	1330
Weight (Kg)	385	425	455
Max. trenching depth (mm)	600	900	1200
Fixed trenching width (mm)	150	150	150
Hydraulic flow (L/min)	80-110	90-110	90-110
Max. working pressure (MPa)	21	21	21

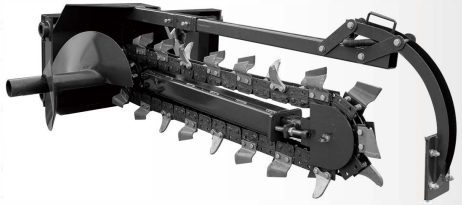

Snow Blade

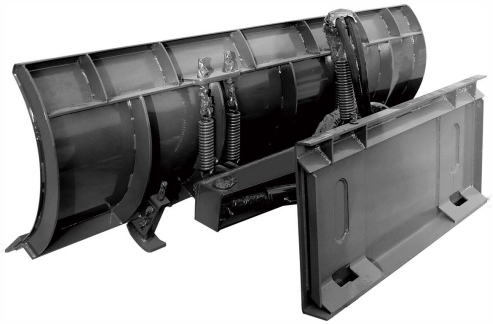

SST-SGB08

MODEL	SST-SGB08A	SST-SGB08B	SST-SGB08C	SST-SGB08D
Overall width (mm)	1500	1830	2130	2430
Overall length (mm)	1010	1010	1010	1010
Height (mm)	978	978	978	978
Transportation height (mm)	635	635	635	635
Width of operation in 30 ° (mm)	1300	1580	1845	2100
Angle of rotation (Hydraulic control) (°)	±30	±30	±30	±30
Weight (Kg)	280	295	312	325
Height of obstacle avoidance (mm)	≤80	≤80	≤80	≤80
Max. working pressure (Mpa)	21	21	21	21
Compatible Carrier	Skid steer loader		Skid steer loader/Loader	

Snow Blower

SST-SBL09

MODEL	SST-SBL09A	SST-SBL09B
Overall length(mm)	1120	1120
Overall width(mm)	2200	1896
Overall height(standard set)(mm)	1695	1695
Overall height(optional set)(mm)	3458	3458
Transportation height(mm)	1593 (low) / 2140 (high)	1593 (low) / 2140 (high)
Weight (including accessory) (kg)	554 (low) / 600 (high)	520 (low) / 570 (high)
Control mode	Electro-hydraulic control	Electro-hydraulic control
Angle of Rotation (°)	270 (low) / 200 (high)	270 (low) / 200 (high)
Max. loading height (for optional set) (m)	3.3	3.3
Max. snow-throwing distance (m)	12	12
Hydraulic flow (L/min)	120-150	120-150
Max. operating pressure (Mpa)	21	21
Suitable machine (High hydraulic flow is required)	Skid steer loader	Skid steer loader
Auger Diameter (mm)	470	470

Concrete Mixer Bucket

SST-CMB10

MODEL	SST-CMB10A	SST-CMB10B
Overall length(mm)	1345	1345
Overall width(mm)	1835	2135
Overall height (mm)	1215	1215
Capacity (production output) (m^3)	0.45	0.6
Hydraulic flow (l/min)	60-110	60-110
Max. sustainable pressure (MPa)	21	21
Weight(including accessory) (kg)	560	650
Unloading model	front/lateral unloading	front/lateral unloading
Compatible Carrier	Skid steer loader / Compact loader	

Disc Ditcher

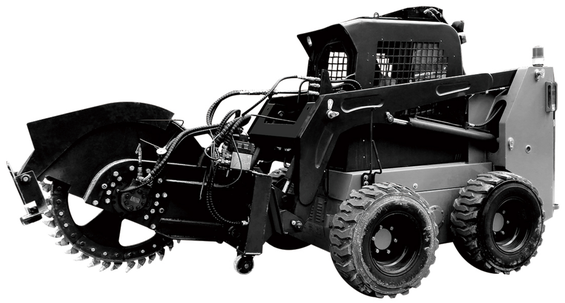

SST-DD05

MODEL	SST-DD05A	SST-DD05B
Overall width (mm)	1650	1700
Overall length (mm)	1640	2000
Overall height (mm)	1300	1600
Trenching width (mm)	100 (≈3.9 inch)	100 (≈3.9 inch)
Max. cutting depth (mm)	450	600
Side shift distance (mm)	650	650
Cutting hammer quantity	40	56
Weight (Kg)	1100	1200
Max. working pressure (MPa)	21	21
Hydraulic flow (L/min)	130-150	130-150
Working Voltage (V)	DC12/24	DC12/24
Compatible Carrier	Skid steer loader (high hydraulic flow is required)	

Dozer Blade

SST-DO09

MODEL	SST-DO09A	SST-DO09B	SST-DO09C	SST-DO09D
Overall width (mm)	1530	1830	2130	2400
Width during 30 ° deflection angle (mm)	1270	1519	1845	2180
Overall height (mm)	700	700	700	700
Overall length (mm)	965	965	965	965
Max. deflection angle (°)	±30	±30	±30	±30
Max. yaw angle (°)	±10	±10	±10	±10
Weight (Kg)	525	556	575	625
Hydraulic flow (L/Min)	20-30	20-30	20-30	20-30
Working voltage (V)	DC12/24	DC12/24	DC12/24	DC12/24
Max. working pressure (MPa)	21	21	21	21
Compatible Carrier	Skid steer loader / Compactor loader			

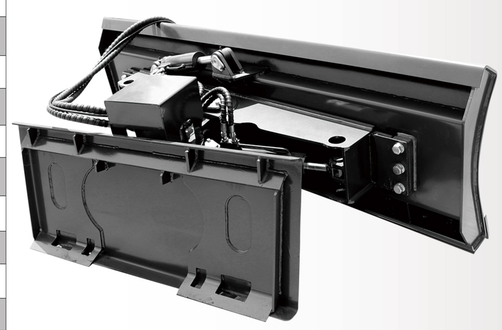

Bag Grapple：

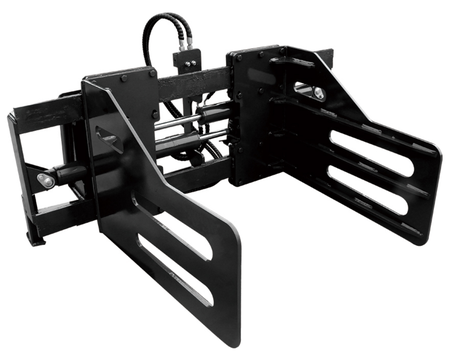

SST-BG05

MODEL	SST-BG05
Overall length (mm)	1200
Overall height (mm)	735
Overall width (mm)	1630
Weight (includingbracket)(Kg)	405
Max. working pressure(MPa)	21
Clamping range (mm)	500-1500
Required hydraulic flow(L/min)	30-60
Max. load (Kg)	600
Compatible Carrier	Skid steer loader / Compact loader

Tree Spade

SST-TS02

MODEL	SST-TS02A	SST-TS02B
Overall height (mm)	1383	1828
Overall width (mm)	1400	1780
Overall length (mm)	1423	1815
Weight (including accessory) (Kg)	450	680
Applicable Tree Diameter (mm)	≤φ50	≤φ100
Root ball Diameter(mm)	≤φ560	≤φ880
Digging Depth (mm)	≤500	≤700
Max. sustainable operating pressure (MPa)	21	21
Working Voltage (V)	DC12/DC24	DC12/DC24
Overall Height when the spade is at the highest point (mm)	1430	1840
Overall Height when the spade is at the lowest point (mm)	1383	1828
Accessories for being chosen	(1) Brace device; (2) Mechanical or hydraulic landing leg installed on the back of the main machine.	
Compatible Carrier	Skid steer loader / Compact loader	

Tree Spade

SST-TS03

MODEL	SST-TS03A	SST-TS03B
Overall length (mm)	1656	2112
Overall width (mm)	1596	2112
Weight (including accessory) (mm)	850	998
Applicable Tree Diameter (mm)	≤φ100	≤φ120
Soil Ball Diameter(mm)	≤φ850	≤φ1110
Digging Depth (mm)	≤720	≤1000
Max. sustainable operating pressure (MPa)	21	21
Working Voltage (V)	DC12/DC24	DC12/DC24
Overall Height when the spade is at the highest point (mm)	1867	2575
Overall Height when the spade is at the lowest point (mm)	1847	2555

Grass Grapple

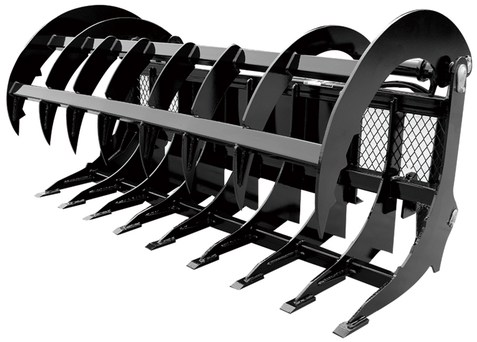

SST-GG09

MODEL	SST-GG09A	SST-GG09B	SST-GG09C
Overall length (mm)	1525	1830	2135
Overall width (mm)	686	686	686
Overall height (mm)	965	965	965
Mouth-opening distance (mm)	1200	1200	1200
Gap distance between teeth (mm)	240	240	240
Weight (Kg)	310	435	580

Backhoe Digger

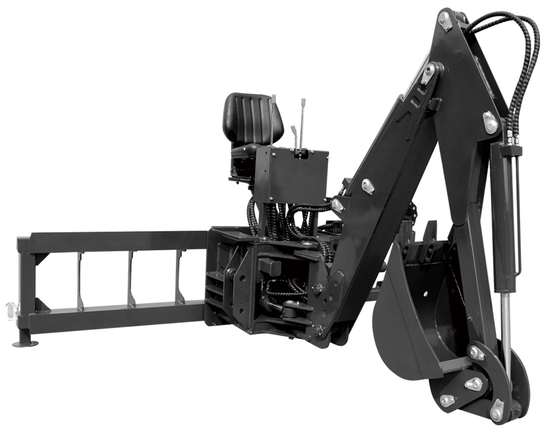

SST-BD01

MODEL	SST-BD01A (Straight arm)	SST-BD01B (Crank arm)
Max. digging depth (mm)	2430	2375
Max. lifting height(mm)	2864	2547
Max. horizontal arm length(mm)	3269	3019
Max. unloading height(mm)	1495	1467
Height（mm）	215	215
Swing angle（°）	±70	±70
Bucket rotation angle（°）	186°	150°
Bracket width（mm）	1176	1176
Weight（Kg）	682	712
Hydraulic flow（L/min）	20-50	20-50
Max. sustainable pressure (MPa)	21	21
Optional Bucket	Standard type 0.04m³ Optional type 0.03m³、0.05m³	
Compatible Carrier	Skid steer loader / Compact loader	

Tree Shear

SST-TS12

MODEL	SST-TS12A	SST-TS12B
Overall Width (mm)	1900	2300
Overall Height (mm)	1255	1455
Overall Length (mm)	860	895
Diameter（mm）	≤φ300	≤φ400
Weight（including accessory）（kg）	765	870
Max. sustainable operating pressure（MPa）	21	21
Hydraulic flow（L/min）	50-75	50-75
Operating voltage（V）（Optional）	DC12/DC24	DC12/DC24
Compatible Carrier	Skid steer loader / Compact loader	

Auger

SST-AU10

MODEL	SST-AU10A	SST-AU10B	SST-AU10C	SST-AU10D	SST-AU10E
Overall length (mm) (without drill bit)	242	307	317	321	400
Overall width (mm) (without drill bit)	184	240	237	245	312
Overall height (mm)	1847	1926	2043	2149	2556
Weight (kg)	148	187	249	297	498
Hydraulic flow (L/min)	23-61	23-76	45-151	45-151	45-151
Working pressure (MPa)	17.0	15.5	18.5	17.0	18.5
Aperture of drill hole (mm)	50-300	100-400	100-500	100-700	100-1000
Rotation Speed	42-152	20-73	31-107	20-72	11-37
Max. depth of hole drilling (m)	1.6	2.1	2.4	3.0	5.3
Hexagon output shaft size (inch)	2	2	2	2.5	2.6
Length of drill bit (m)	1.22	1.22	1.22	1.50	1.50

Forestry Mulcher

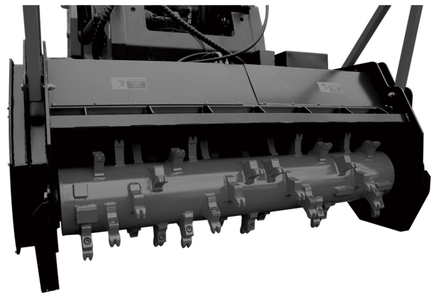

SST-FM13

MODEL	SST-FM13A	SST-FM13B	SST-FM13C
Length (mm)	900	900	900
Width (mm)	1860	2160	2410
Height (mm)	1680	1680	1680
Transporting height (mm)	1080	1080	1080
Working width (mm)	1550	1850	2100
Weight (including accessory)（kg）	985	1125	1235
Required hydraulic flow（L/Min）	110-140	120-150	120-150
Max. sustainable operating pressure (Mpa)	21	21	21
Required lifting capacity of the main machine(t)	>1	>1.1	>1.2
Rotary tillage Depth below the ground surface (mm)	≤100	≤100	≤100
Number of cutting hammers	40	48	56
Radiator voltage（V）	DC12/24	DC12/24	DC12/24
Required power of the main machine	85HP above	100HP above	100HP above

Tree Saw

SST-TS17

MODEL	SST-TS17
Overall length (mm)	2435
Overall width (mm)	1200
Overall height (mm)	780
Cutter Head diameter (mm)	φ700
Deflection angle (°)	±12
Weight (including accessory)(kg)	300
Operation Hydraulic flow (L/min)	65-85
Max. sustainable operating pressure (MPa)	20
Compatible Carrier	Skid steer loader/ Small or compact loader

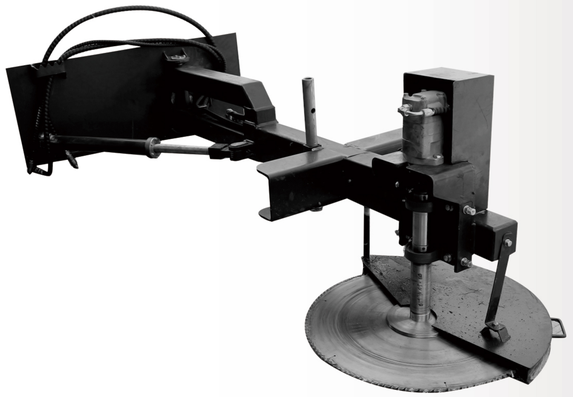

Wood Chipper

SST-WC19

MODEL	SST-WC19
Overall length (mm)	2770
Overall width (mm)	2440
Overall height (mm)	2340
Weight (kg)	870
Diameter of timber (mm)	≤φ100
Rotation angle of throwing barrel (°)	360
Hydraulic flow (L/min)	120-140
Max. sustainable pressure (MPa)	20
Compatible Carrier	Skid steer loader (requiring high hydraulic flow output)

Tree Spade

SST-TSBM

MODEL	SST-TSBM
Dimension (L*W*H) (mm)	3300x3070x3640
Weight (Kg)	3545
Digging Depth (mm)	1340
Cutting Angle (°)	65
Working Pressure (MPa)	12-21
Max. diameter of root ball (mm)	1700
Suitable trunk diameter (mm)	200
Overall Height when the spade is at the highest point (mm)	3660
Overall Height when the spade is at the lowest point (mm)	3600
Compatible Carrier	5T/6T Loader

PURITY BRINGS OUT GREATNESS

Certain specification(s) are based on engineering calculations and are not actual measurements. Specification(s) are provided for comparison purposes only and are subject to change without notice. Specification(s) for your individual equipment will vary based on normal variations in design, manufacturing, operating conditions, and other factors.